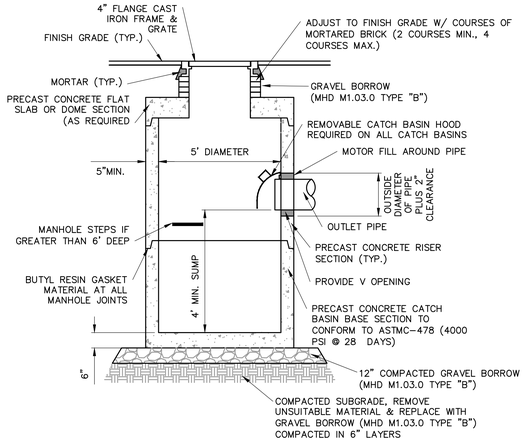

TYPICAL CATCH BASIN DETAIL

NOT TO SCALE

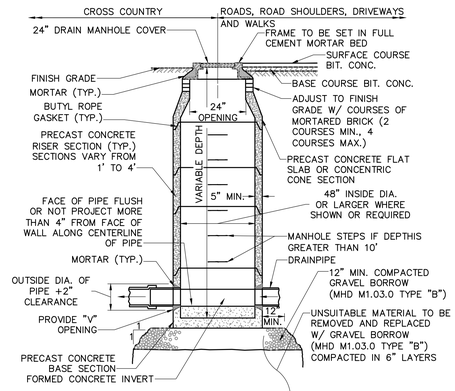

TYPICAL DRAIN MANHOLE DETAIL

NOT TO SCALE

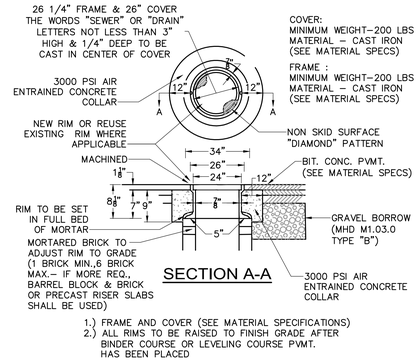

MANHOLE FRAME, COVER & SETTING DETAIL

NOT TO SCALE

NOTE:
* INJECTION MOLDED FITTINGS ARE AVAILABLE IN TEES, WYES, REDUCERS, 45° BENDS AND BELL/BELL COUPLERS.
* WT INJECTION MOLDED FITTINGS AND WT PIPE CAN BE SUBSTITUTED FOR WATER TIGHT APPLICATIONS

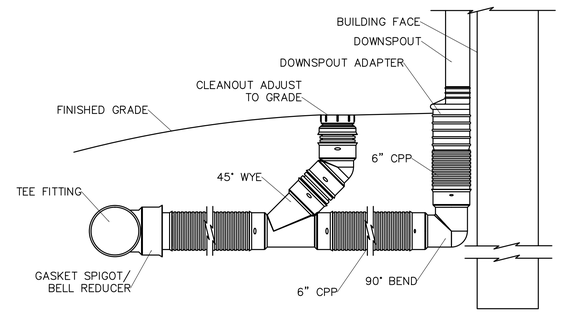

ROOF DRAIN WITH CPP CONNECTION

NOT TO SCALE

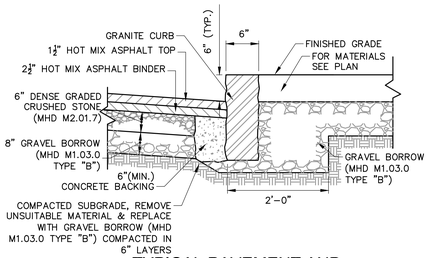

TYPICAL PAVEMENT AND GRANITE CURB SECTION

NOT TO SCALE

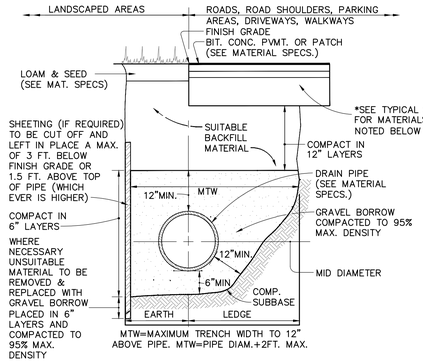

STANDARD TRENCH DETAIL FOR UTILITY PIPE

NOT TO SCALE

NOTES: TRENCH WORK LOCATED IN THE PUBLIC WAY SHALL CONFORM TO TOWN OF DRACUT PUBLIC WORKS PERMIT TO EXCAVATE A PUBLIC WAY.

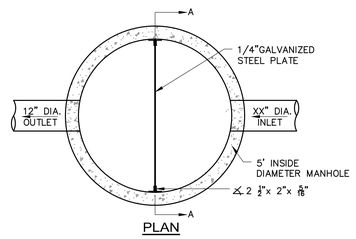

PLAN

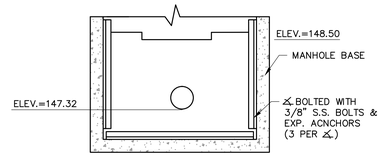

SECTION A-A

OCS#1

NOT TO SCALE

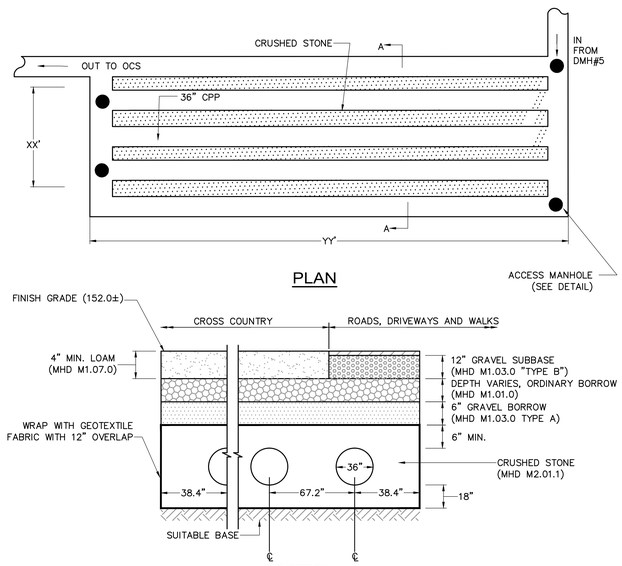

PLAN

SECTION A-A

SUBSURFACE INFILTRATION SYSTEM

NOT TO SCALE

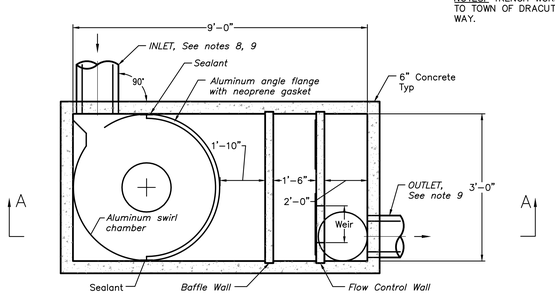

PLAN VIEW B - B

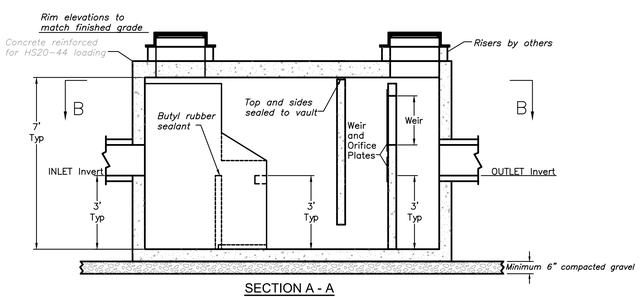

SECTION A - A

VORTECHS STORMWATER TREATMENT SYSTEM MODEL #1000

NOT TO SCALE

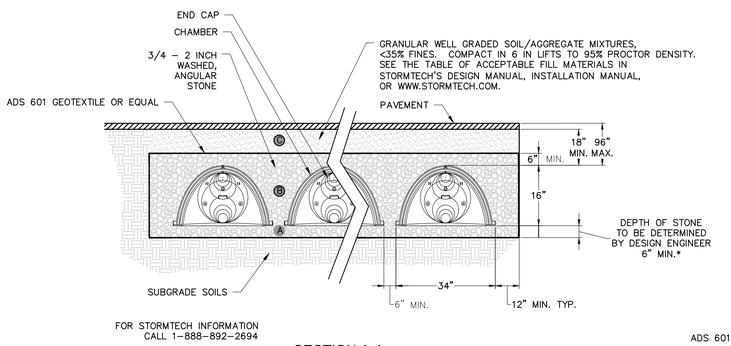

SECTION A-A

STC-310

NOT TO SCALE

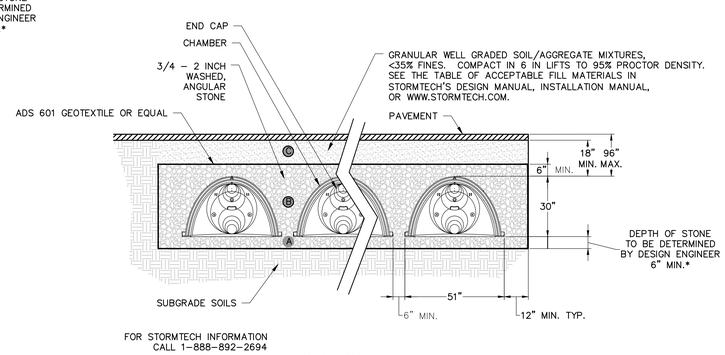

SECTION A-A

STC-740

NOT TO SCALE

FOR PERMITTING ONLY
NITSCH PROJECT #9556

Nitsch Engineering
www.nitscheng.com
2 Center Plaza, Suite 430
Boston, MA 02108
T: (617) 338-0063
F: (617) 338-6472
► Civil Engineering
► Land Surveying
► Transportation Engineering
► Sustainable Site Consulting
► Planning
► GIS

ISSUE DATES

DATE	BY	DESCRIPTION
05/01/13	DMC	NOI

OWNER

PROJECT

Scholastic Sports Facilities and Wellness Center

Xaverian Brothers High School
800 Clapboardtree Street
Westwood, MA

JOB NUMBER 13-350

SCALE AS SHOWN

DRAWING NAME
SITE UTILITY DETAILS

DRAWING NO.
C-402